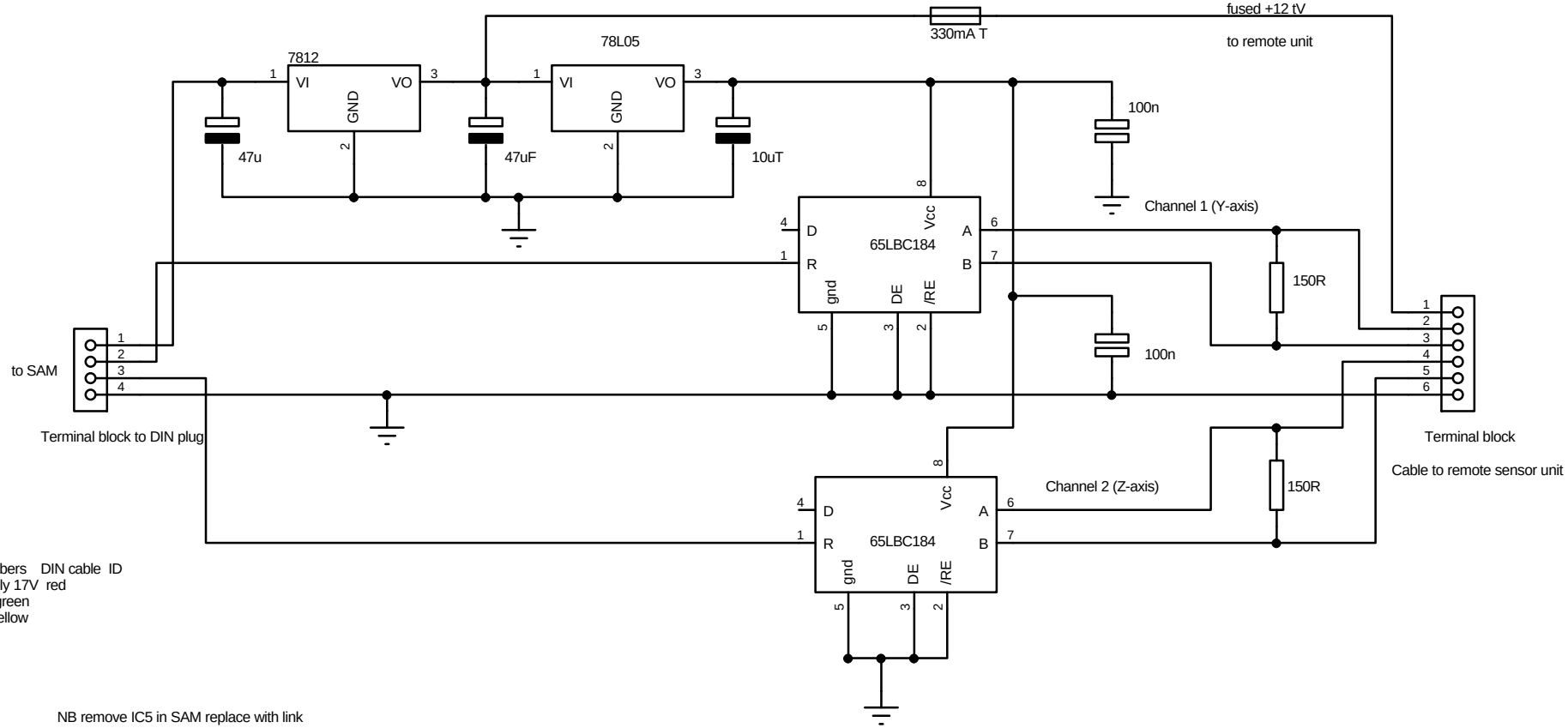

Terminal pin numbers DIN cable ID
1 sensor supply 17V red
2 Y input green
3 Z input yellow
4 0V blue

NB remove IC5 in SAM replace with link

TITLE:	DATE:
Magnetometer Line Receiver	19-Jul-04
	PAGE:
BY: R P Blackwell REV:	1/1