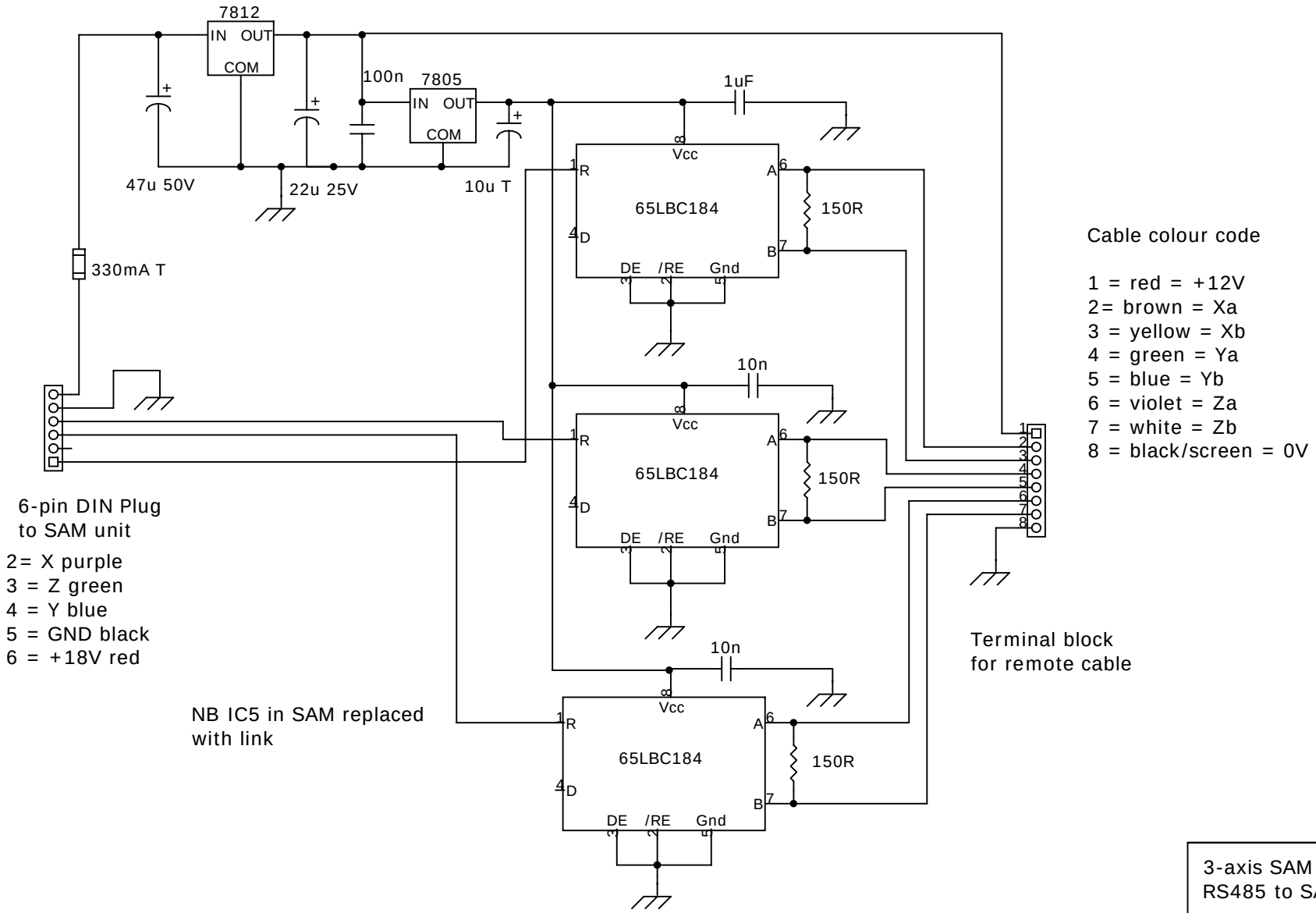

3-axis SAM Magnetometer RS485 to SAM interface	
Rev 1.0	ID
Date: 6 May 2010	Page: 1 of 1