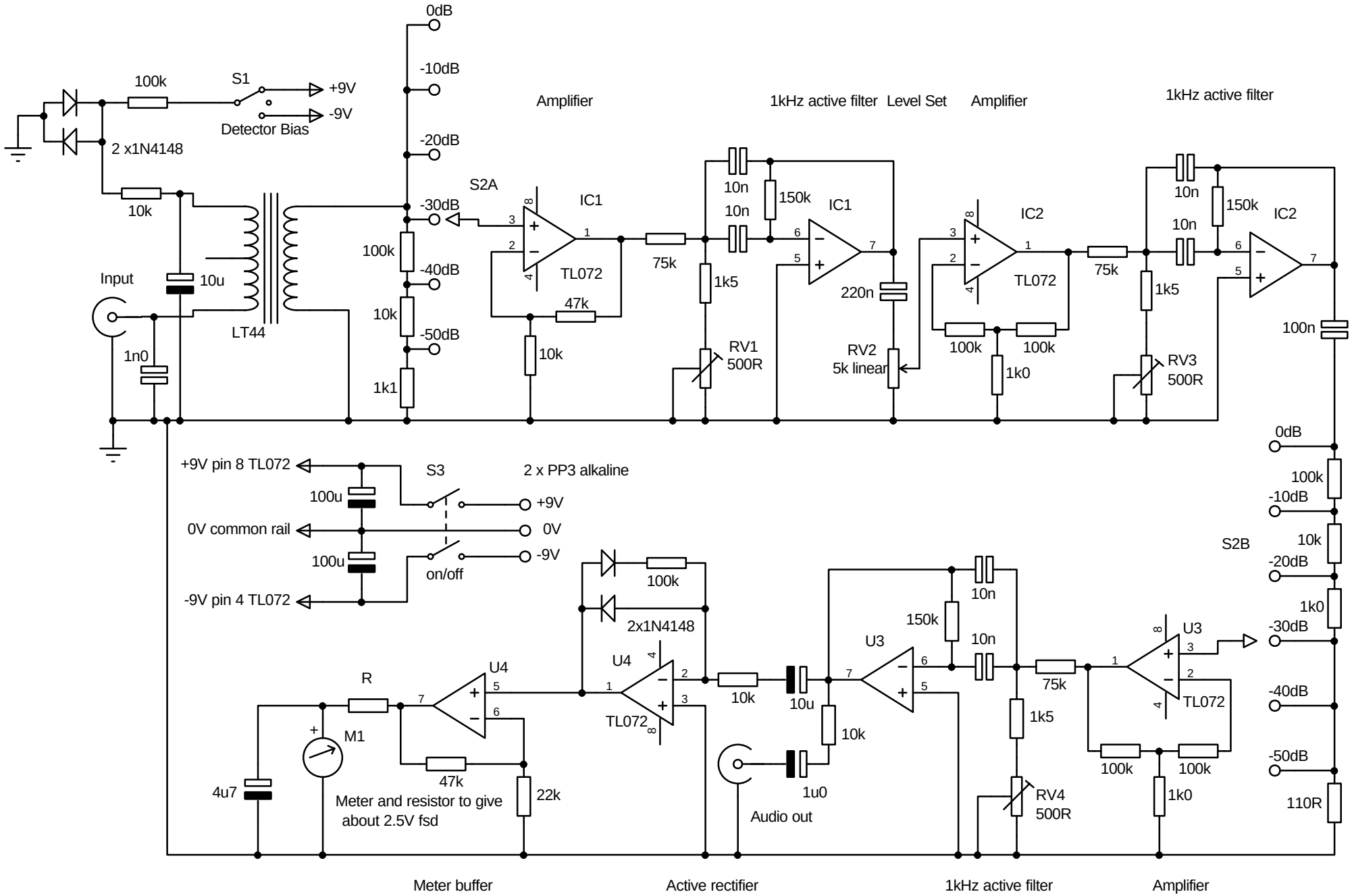
0dB
-10dB
-20dB
-30dB
-40dB
-50dB
100k
S1
+9V
-9V
Detector Bias
2 x1N4148
10k
Input
10u
1n0
LT44
100k
10k
1k1
S2A
Amplifier
IC1
TL072
47k
10k
75k
10n
10n
150k
1k5
RV1
500R
1kHz active filter
Level Set
IC1
220n
RV2
5k linear
Amplifier
IC2
TL072
100k
100k
1k0
75k
1kHz active filter
10n
10n
150k
1k5
RV3
500R
IC2
100n
0dB
100k
-10dB
10k
-20dB
1k0
-30dB
-40dB
-50dB
110R
S2B
+9V pin 8 TL072
100u
0V common rail
100u
-9V pin 4 TL072
S3
2 x PP3 alkaline
+9V
0V
-9V
on/off
100k
2x1N4148
U4
TL072
10k
10u
1u0
Audio out
10k
U3
150k
10n
10n
1k5
RV4
500R
75k
U3
TL072
100k
100k
1k0
R
M1
4u7
47k
22k
Meter and resistor to give
about 2.5V fsd
Meter buffer
Active rectifier
1kHz active filter
Amplifier